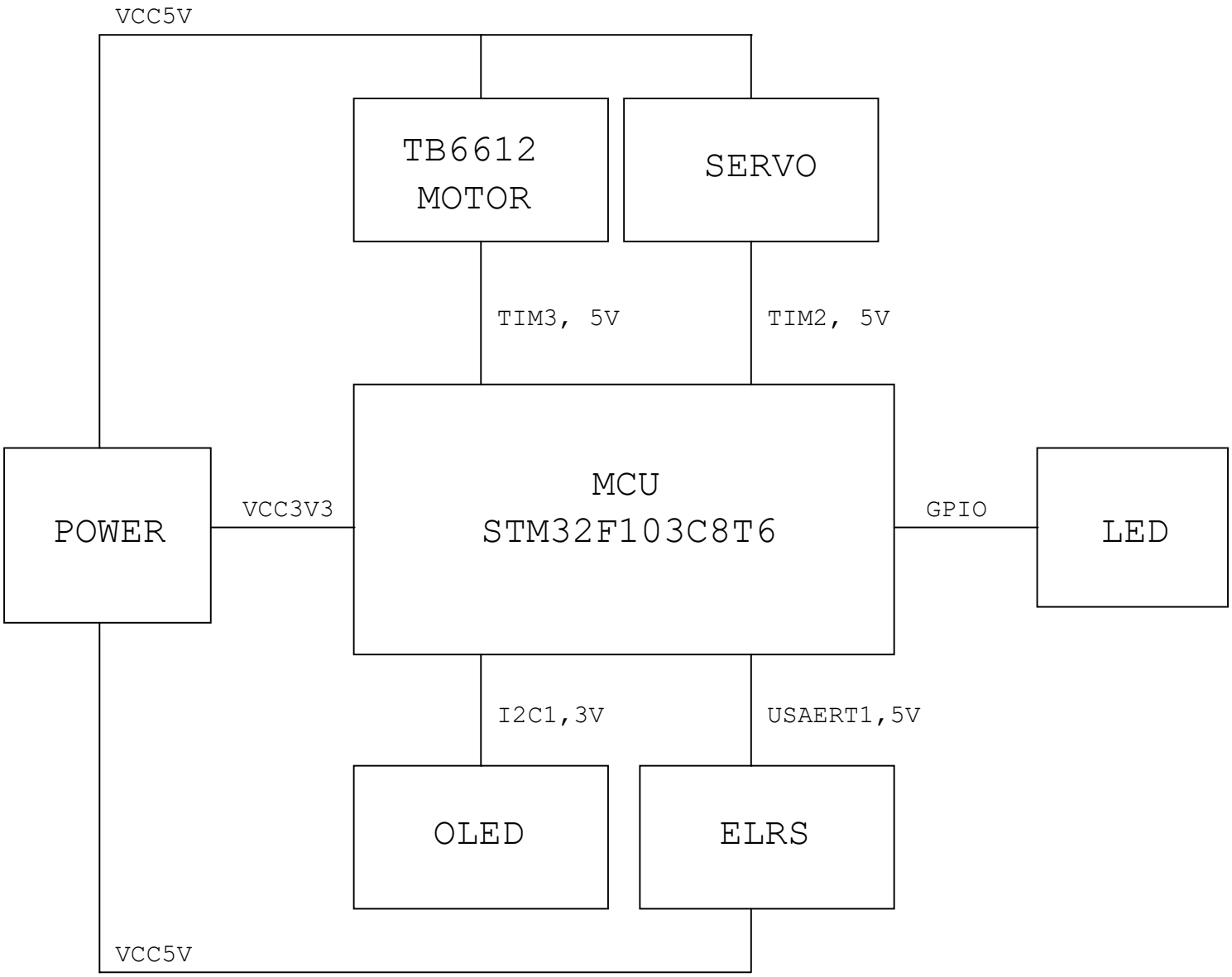

Title	STM32 EXP	
Size A4	Document Number 010-1010	Rev 1
Date: Friday, March 06, 2026	Sheet 1 of 6	

Title	STM32 EXP	
Size A4	Document Number 010-1010	Rev 1
Date: Sunday, March 01, 2026	Sheet 2 of 6	

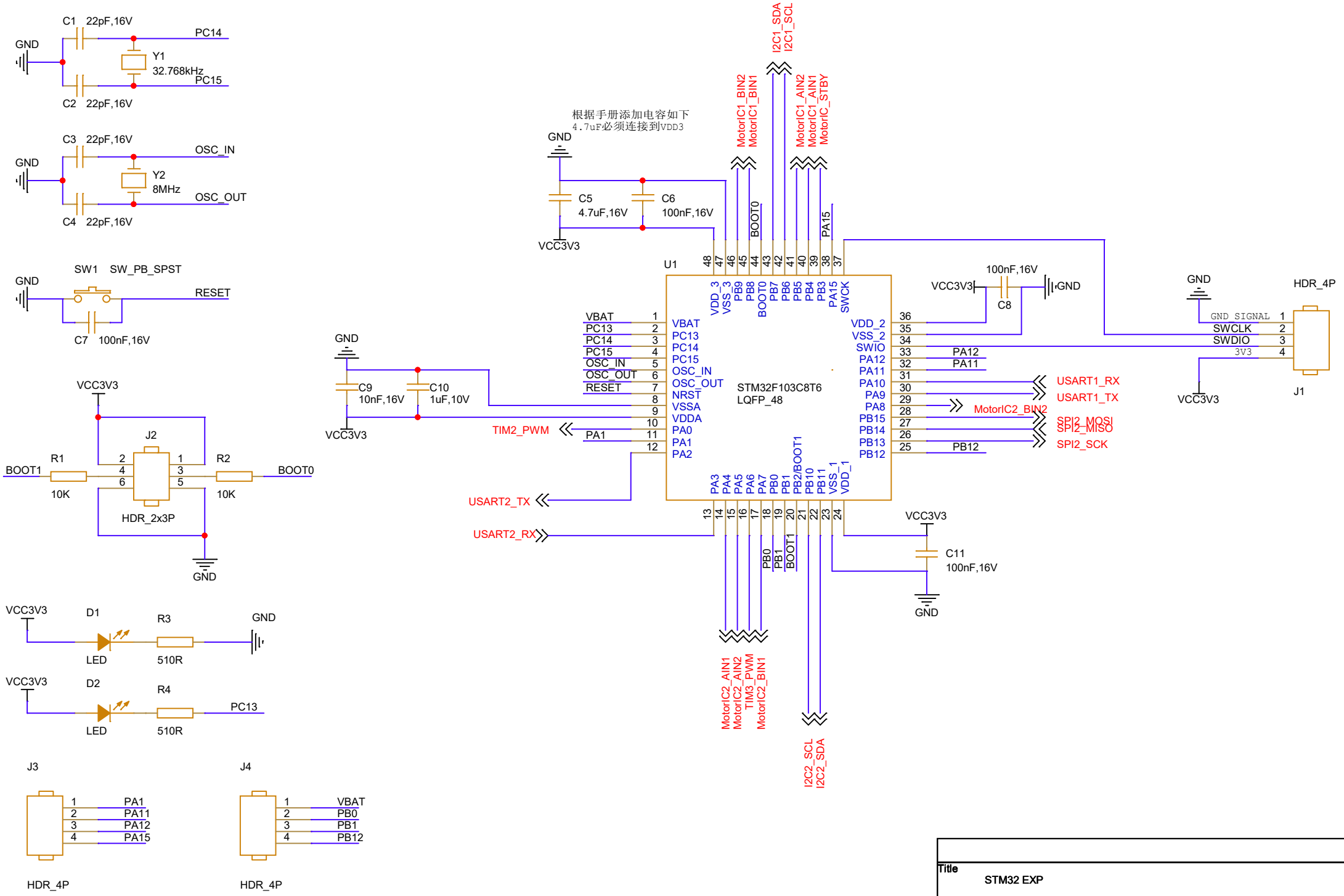

Title	STM32 EXP		
Size A4	Document Number 010-1010		Rev 1
Date: Friday, March 06, 2026		Sheet 3 of 6	

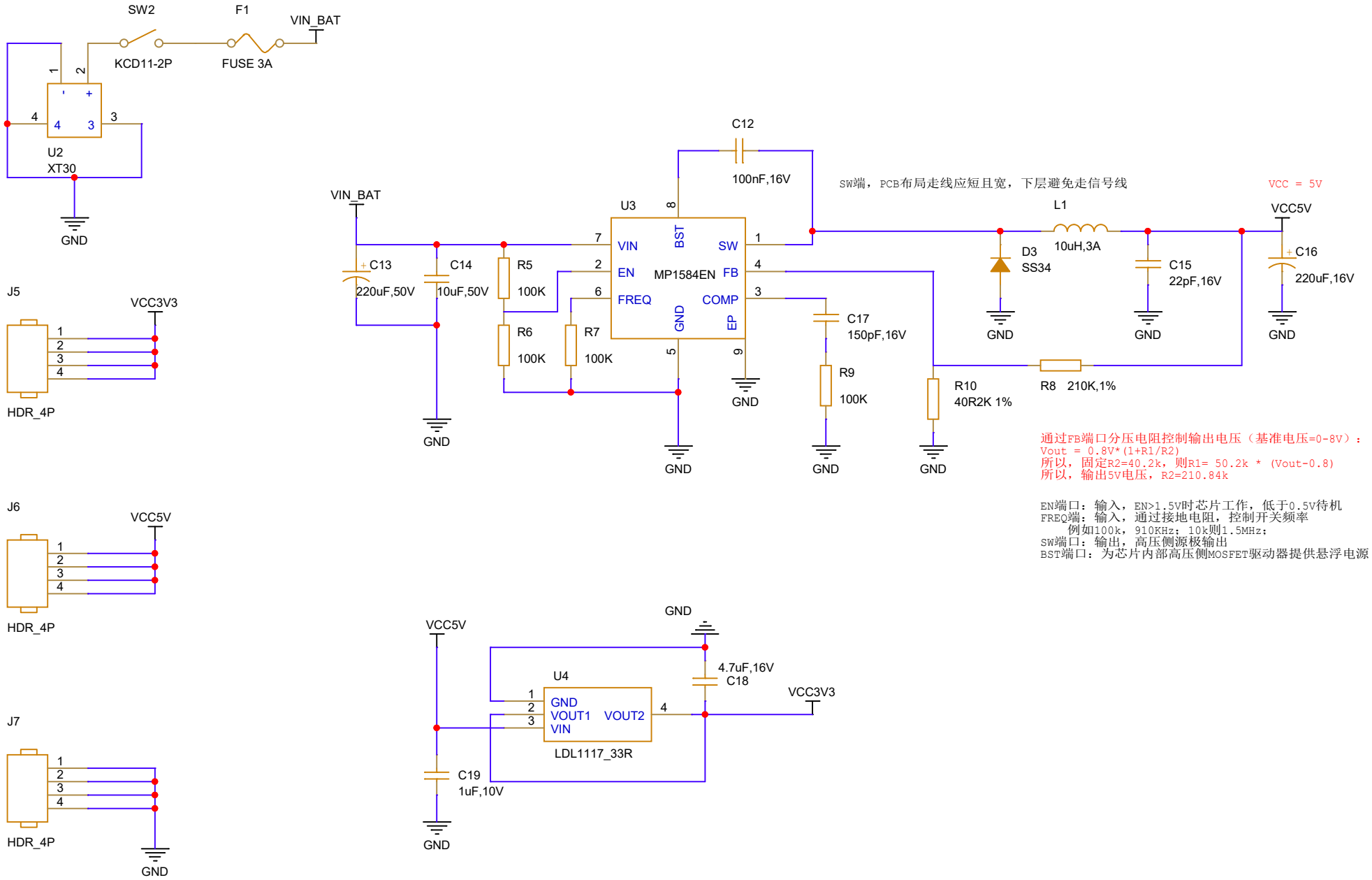

Title	STM32 EXP	
Size A4	Document Number 010-1010	Rev 1
Date: Friday, March 06, 2026	Sheet 4 of 6	

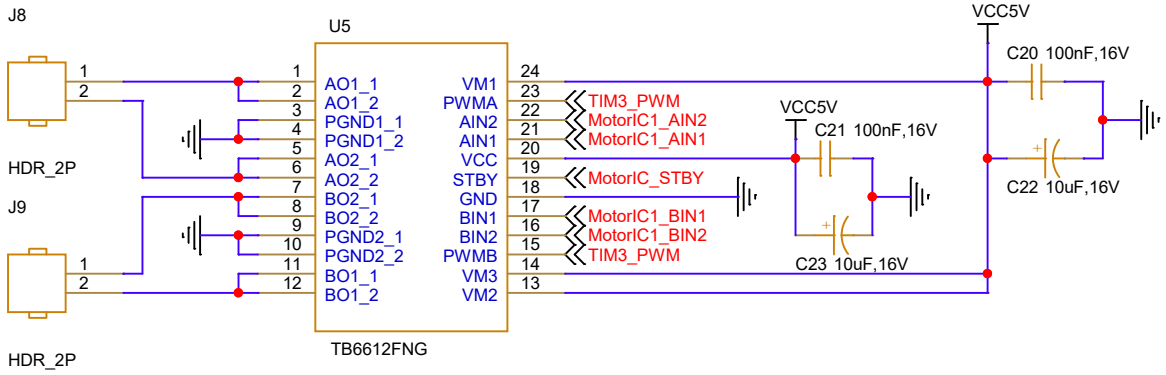

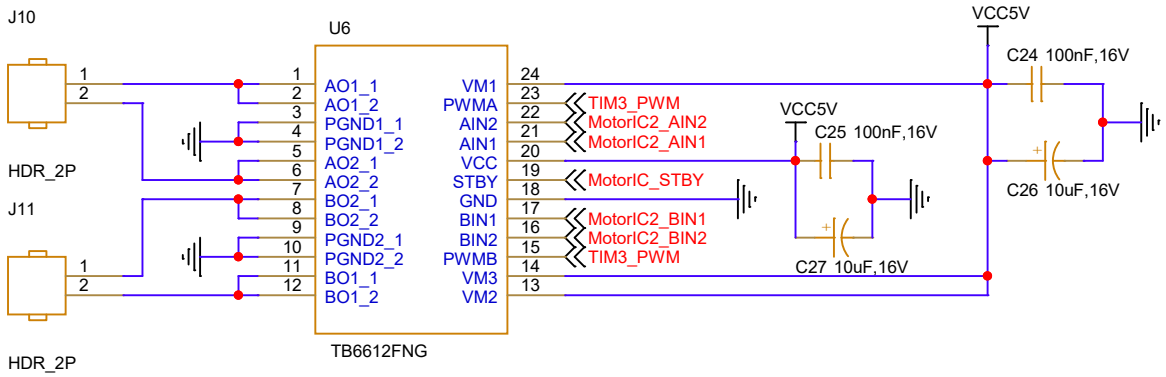

Title	STM32 EXP	
Size A4	Document Number 010-1010	Rev 1
Date: Friday, March 06, 2026	Sheet 5 of 6	

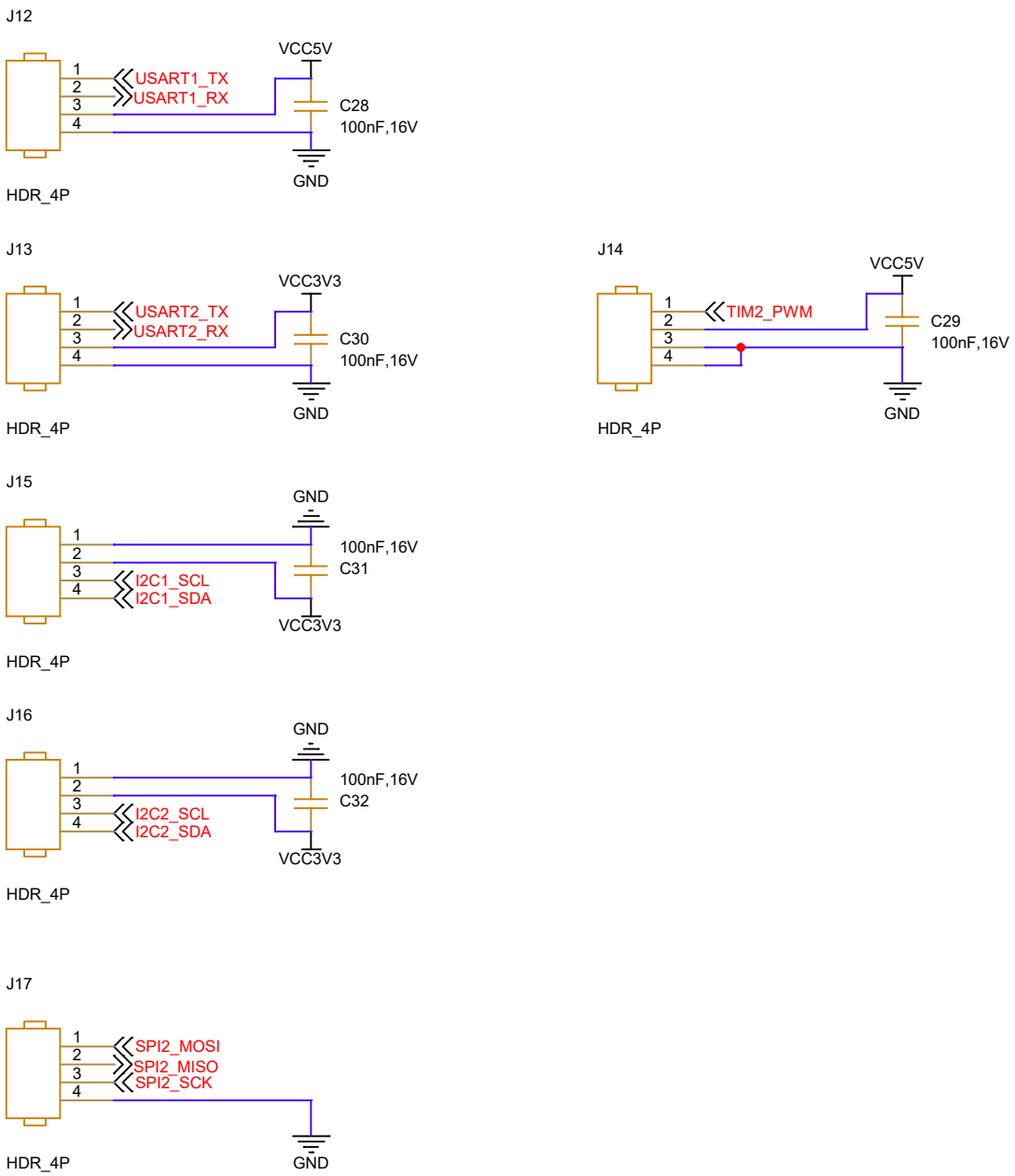

Title	STM32 EXP	
Size A4	Document Number 010-1010	Rev 1
Date: Friday, March 06, 2026	Sheet 6 of 6	